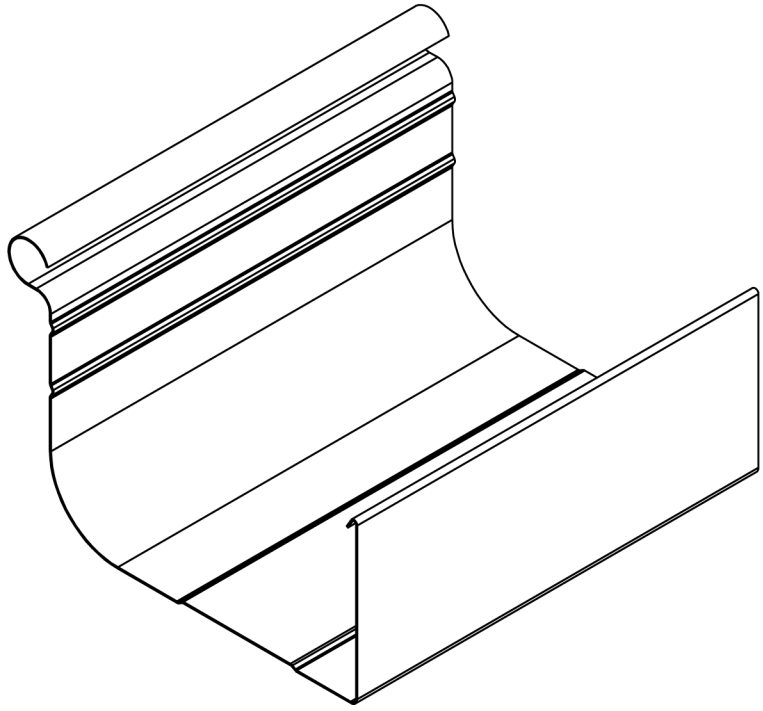

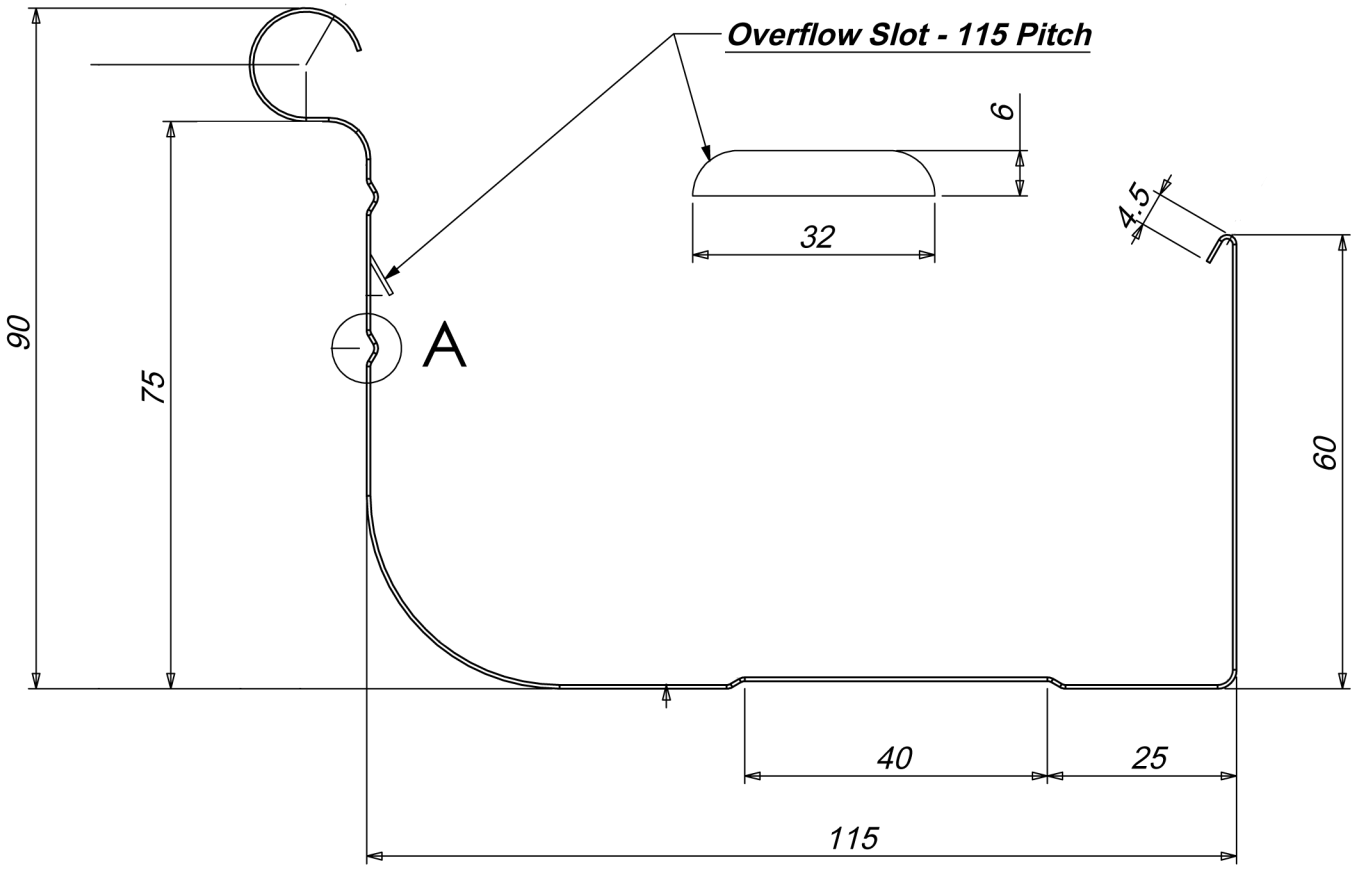
Overflow Slot - 115 Pitch
6
32
4.5
90
75
A
60
40
25
115