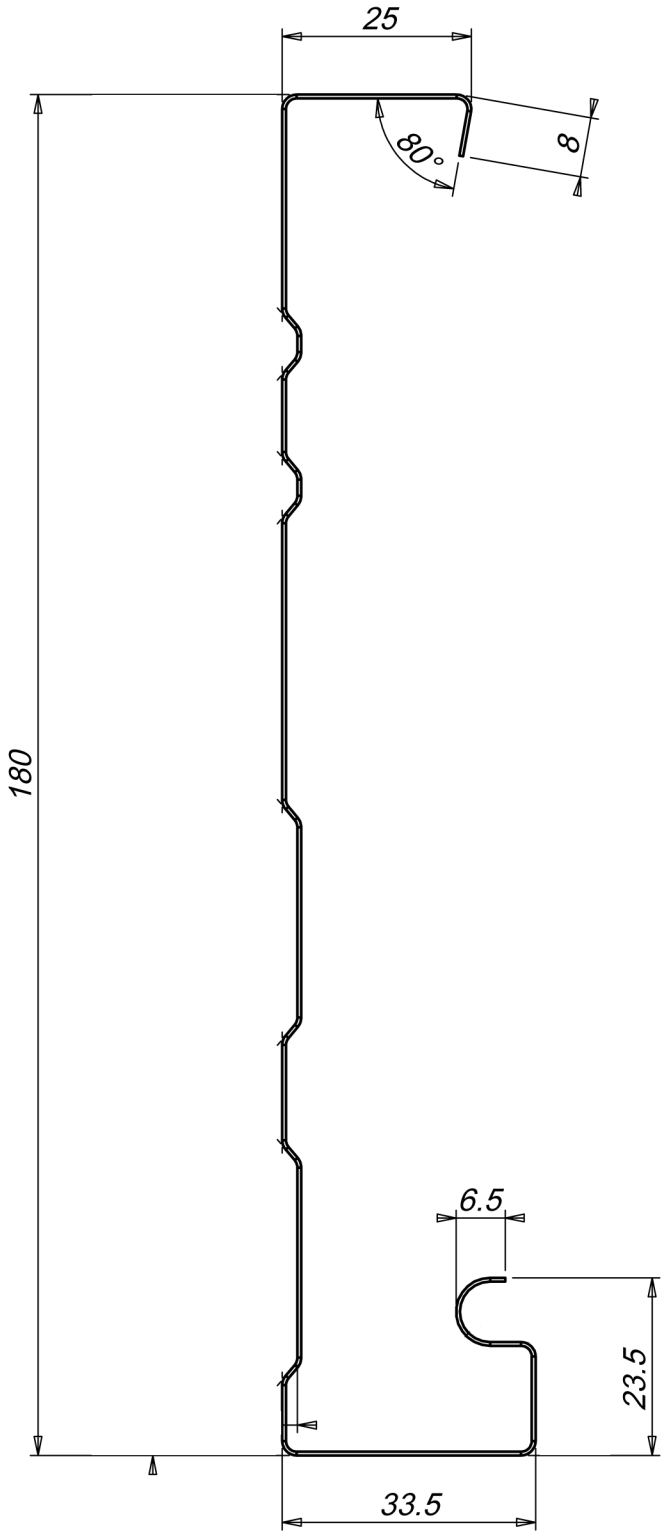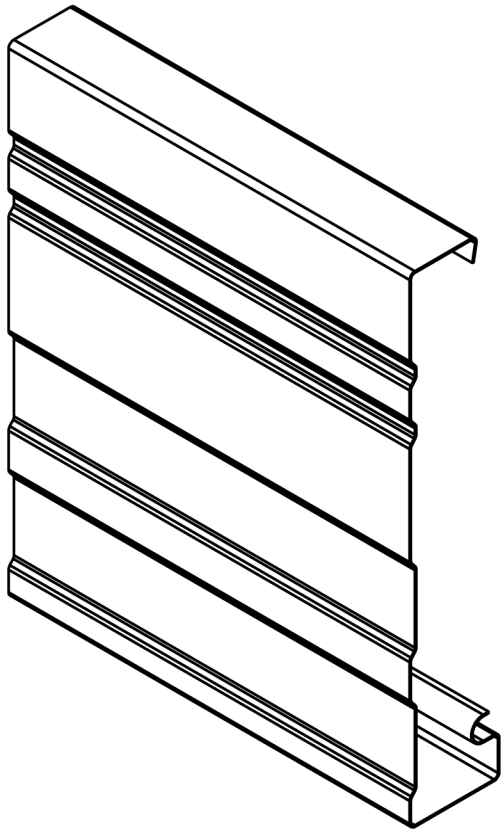
25
80°
8
180
6.5
23.5
33.5